TOWN OF
Ogden
COUNTY OF MONROE
STATE OF NEW YORK

BUILDING PERMIT REQUIREMENTS FOR DECKS

1. Submit a completed residential application, one copy of a tape location or instrument survey map of the property indicating the proposed location, distance to the property lot lines and any overhead wires.
2. Submit 2 copies of a detailed construction drawing showing a **cross section** (see page 10) and the **top view** (see page 11) with footing depth, connection at house, and deck height above grade. Indicate the size of joists and the distance between beams and house. Indicate size of beams and distance between posts. Provide a detail of proposed guardrails, handrails and stairs. Include an overview showing overall measurements, beams and posts. Approved flashing is required at all points of attachment to the house.
3. Please add the property address to all paperwork and drawings submitted.
4. Provide the value of construction.
5. If the construction is being done by a contractor, they must have **General Liability, Workers' Compensation** and **Disability Benefits** insurance on file before a permit can be issued. Please call the Technical Services Building Department with any questions.
6. Check with the Technical Services Building Department for the required setbacks for the property.
7. Plan review is done by our staff prior to issuing a building permit. After receiving the above information, this review is done in a timely manner. During the busy times, the review of a minor project could take up to 10 business days.
8. At least 24 hours notice is required for inspections, 48 hours notice during the busy times. Required inspections are usually footing, rough framing and a final.
9. Footers must be 42 inches deep and must be inspected before concrete is placed.
10. A Certificate of Compliance (final inspection) is required on all deck permits. **It is the responsibility of the homeowner** to assure that a final inspection has passed and a **Certificate of Compliance has been issued.**

LEDGER DETAILS

Deck ledgers shall be a minimum 2-inch by 8-inch nominal, pressure-preservative-treated southern pine, No. 2 grade or better lumber. Fasteners used in deck ledger connections shall be hot-dipped galvanized or stainless steel and shall be installed per the following details.

Deck ledgers shall not be concentrated loads from beams or girders. Deck ledgers shall not be supported on stone or masonry veneer.

DECK LEDGER CONNECTION TO BAND JOIST

CONNECTION DETAILS	JOIST SPAN						
	6' and less	6'1" to 8'	8'1" to 10'	10'1" to 12'	12'1" to 14'	14'1" to 16'	16'1" to 18'
	On-center spacing of fasteners[c,d]						
1/2-inch diameter lag screw with 1/2-inch maximum sheathing[b, c]	30	23	18	15	13	11	10
1/2-inch diameter bolt with 1/2-inch maximum sheathing[c]	36	36	34	29	24	21	19
1/2-inch diameter bolt with 1-inch maximum sheathing[d]	36	36	29	24	21	18	16

a. **Ledgers shall be flashed to prevent water from contacting the house band joist**
b. **The tip of the lag screw shall fully extend beyond the inside face of the band joist.**
c. **Sheathing shall be wood structural panel or solid sawn lumber.**
d. **Up to ½ inch thickness of stacked washers shall be permitted to substitute for up to ½ inch of allowable sheathing thickness where combined with wood structural panel or lumber sheathing.**

PLACEMENT OF LAG SCREWS & BOLTS IN DECK LEDGERS & BAND JOISTS

MINIMUM END AND EDGE DISTANCES AND SPACING BETWEEN ROWS				
	TOP EDGE	BOTTOM EDGE	ENDS	ROW SPACING
Ledger[a]	2 inches[d]	3/4 inch	2 inches[b]	1 5/8 inches[b]
Band Joist[c]	3/4 inch	2 inches	2 inches[b]	1 5/8 inches[b]

a. **Lag screws or bolts shall be staggered from the top to the bottom along the horizontal run of the deck ledger.**
b. **Maximum 5 inches.**
c. **For engineered rim joists, the manufacturer's recommendations shall govern.**
d. **The minimum distance from the bottom row of lag screws or bolts to the top edge of the ledger.**

See detail on next page

PLACEMENT OF LAG SCREWS AND BOLTS IN LEDGERS

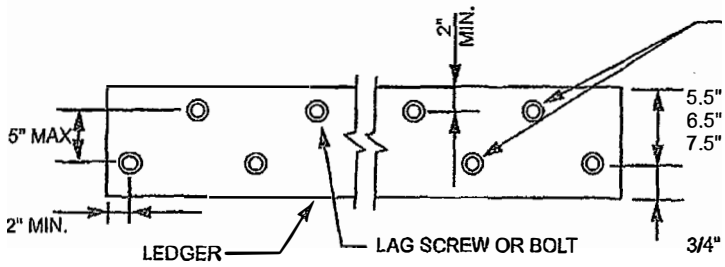

5.5" MIN. FOR 2 X 8*
6.5" MIN. FOR 2 X 10
7.5" MIN. FOR 2 X 12

*DISTANCE SHALL BE PERMITTED TO BE REDUCED TO A 4.5" IF LAG SCREWS ARE USED OR BOLT SPACING IS REDUCED TO THAT OF LAG SCREWS TO ATTACH 2 X 8 LEDGERS TO 2 X 8 BAND JOISTS

For *SI*: 1 inch = 25.4 mm.

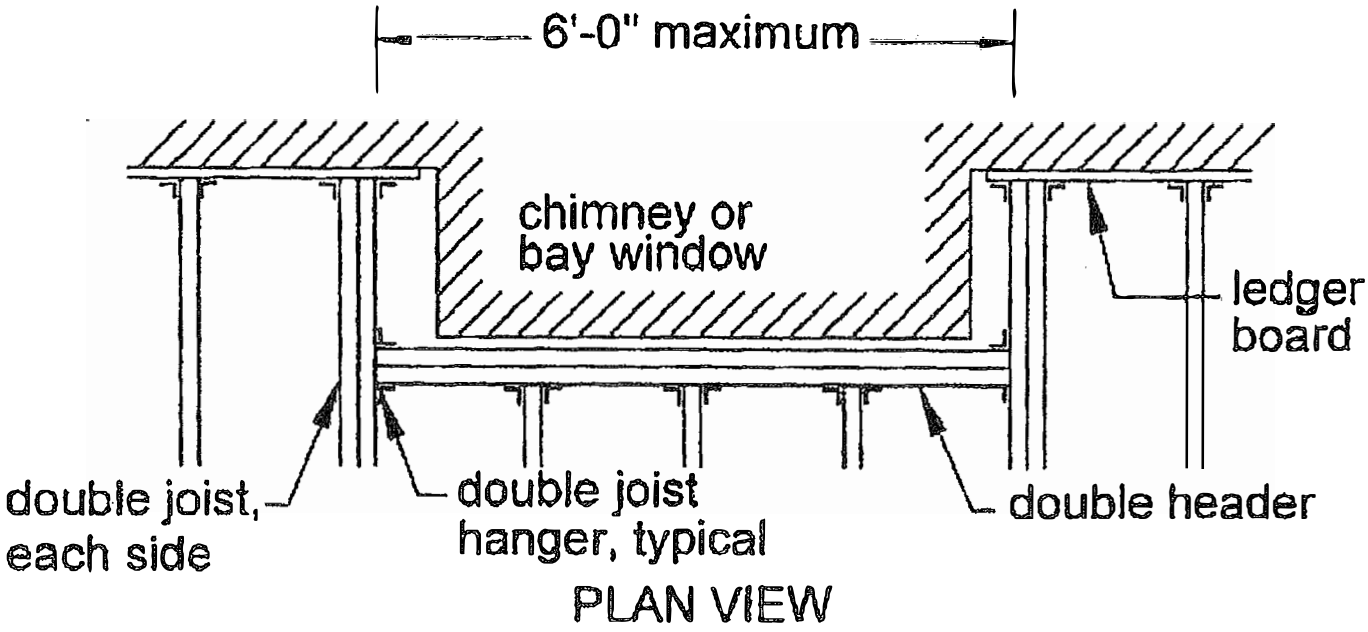

DECK JOIST SPANS FOR COMMON LUMBER SPECIES

TABLE R507.5
DECK JOIST SPANS FOR COMMON LUMBER SPECIES[f] (ft. - in.)

SPECIES[a]	SIZE	SPACING OF DECK JOISTS WITH NO CANTILEVER[b] (inches)			SPACING OF DECK JOISTS WITH CANTILEVERS[c] (inches)		
		12	16	24	12	16	24
Southern pine	2 × 6	9-11	9-0	7-7	6-8	6-8	6-8
	2 × 8	13-1	11-10	9-8	10-1	10-1	9-8
	2 × 10	16-2	14-0	11-5	14-6	14-0	11-5
	2 × 12	18-0	16-6	13-6	18-0	16-6	13-6

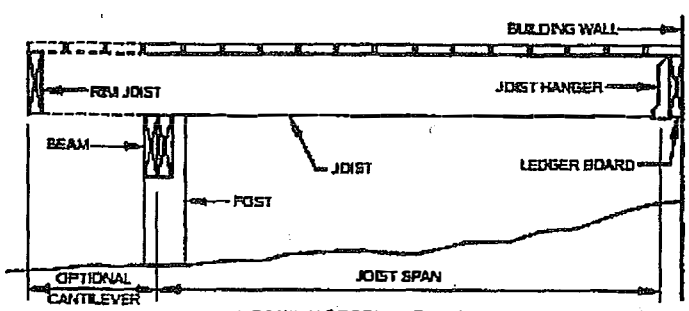

JOISTS WITH DROPPED BEAM

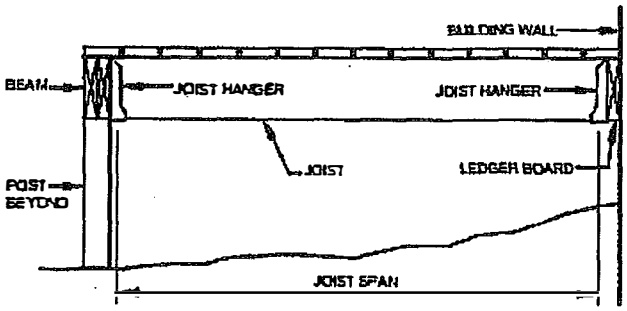

JOISTS WITH FLUSH BEAM

DECK POST TO DECK BEAM CONNECTION

Deck beams shall be attached to deck posts in accordance with the following figure or by other equivalent means capable to resist lateral displacement. Manufactured post-to-beam connectors shall be sized for the post and beam sizes. All bolts shall have washers under the head and nut.

FIGURE R507.5.1(1)
DECK BEAM TO DECK POST

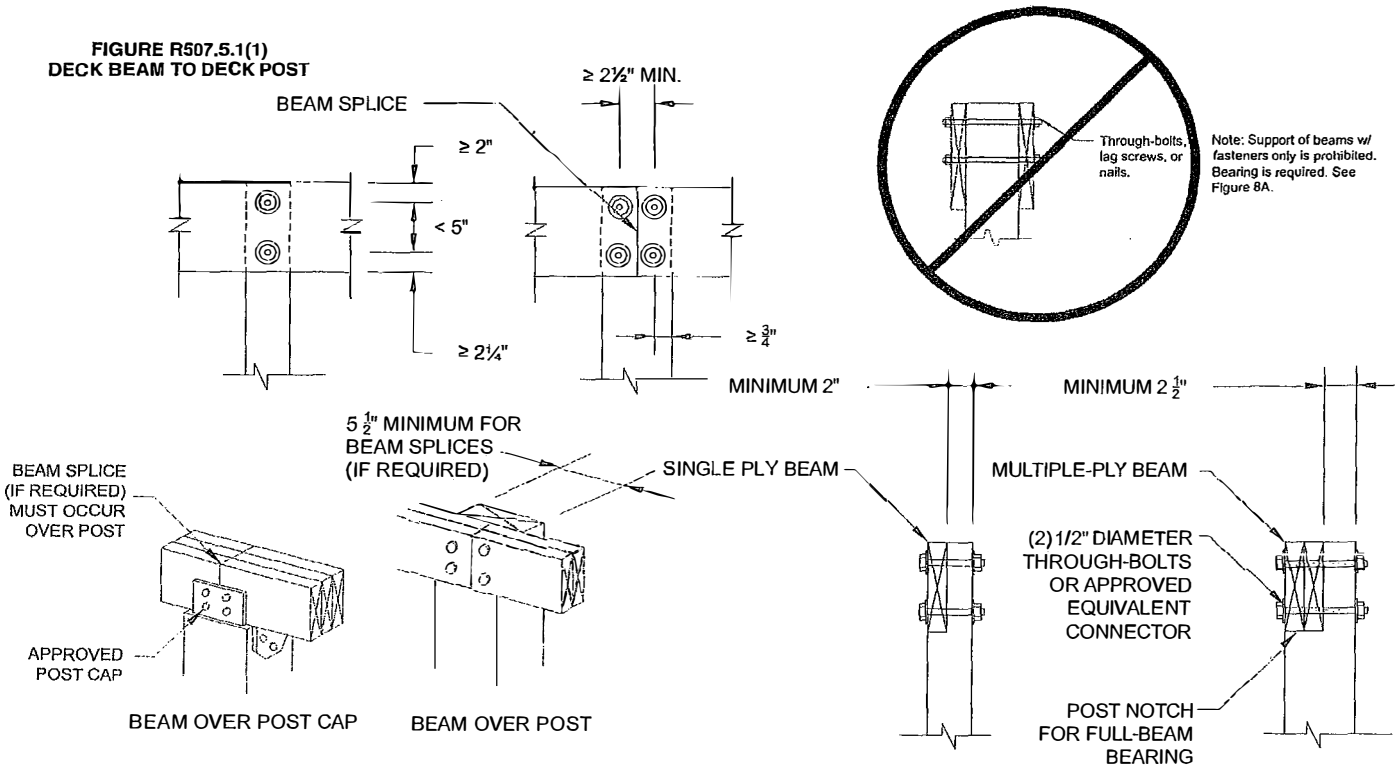

DECK BEAMS

Beam plies shall be fastened with two rows of 10d (3 inch x 0.128 inch) nails minimum at 16 inches on center along each edge. Beams shall be permitted to cantilever at each end up to ¼ of the actual beam span. Splices of multispan beams shall be located at interior post locations. The ends of each beam shall have not less than 1½ inches of bearing on wood or metal and not less than 3 inches on concrete or masonry for the entire width of the beam.

DECK BEAM SPAN LENGTHS

TABLE R507.5
DECK BEAM SPAN LENGTHS[a, b, g] (feet - inches)

SPECIES[c]	SIZE[d]	DECK JOIST SPAN LESS THAN OR EQUAL TO: (feet)						
		6	8	10	12	14	16	18
Southern pine	1 – 2 x 6	4-11	4-0	3-7	3-3	3-0	2-10	2-8
	1 – 2 x 8	5-11	5-1	4-7	4-2	2-10	3-7	3-5
	1 – 2 x 10	7-0	6-0	5-5	4-11	4-7	4-3	4-0
	1 – 2 x 12	8-3	7-1	6-4	5-10	5-5	5-0	4-9
	2 – 2 x 6	6-11	5-11	5-4	4-10	4-6	4-3	4-0
	2 – 2 x 8	8-9	7-7	6-9	6-2	5-9	5-4	5-0
	2 – 2 x 10	10-4	9-0	8-0	7-4	6-9	6-4	6-0
	2 – 2 x 12	12-2	10-7	9-5	8-7	8-0	7-6	7-0
	3 – 2 x 6	8-2	7-5	6-8	6-1	5-8	5-3	5-0
	3 – 2 x 8	10-10	9-6	8-6	7-9	7-2	6-8	6-4
	3 – 2 x 10	13-0	11-3	10-0	9-2	8-6	7-11	7-6
	3 – 2 x 12	15-3	13-3	11-10	10-9	10-0	9-4	8-10

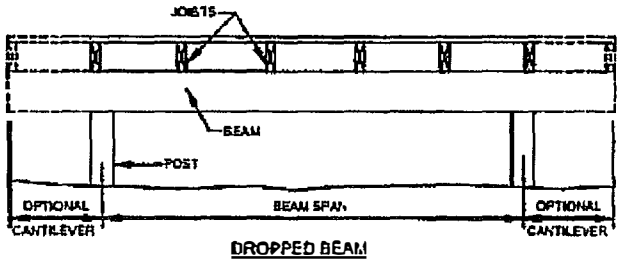

DROPPED BEAM

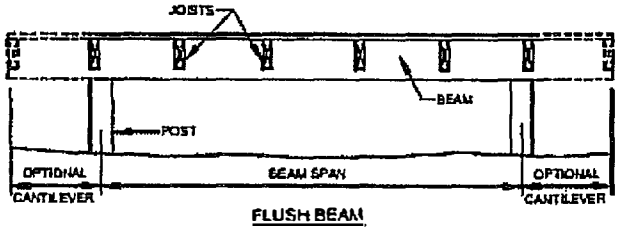

FLUSH BEAM

Deck joist and deck bearing

The ends of each beam shall have not less than 1½ inches of bearing on wood or metal and not less than 3 inches on concrete or masonry for the entire width of the beam. Joist framing into the side of a ledger board or beam shall be supported by approval joist hangers. Joists bearing on a beam shall be connected to the beam to resist lateral displacement

Guidelines for Handrails and Guards

Handrails and guards are two different components.

- A **handrail** is a horizontal or sloping rail intended for grasping by the hand for guidance or support.
- A **guardrail** is a building component located at the open sides of elevated walking surfaces and stairs that minimizes the possibility of a fall from the walking surface

Handrails:

1. Handrails shall be continuous on a least one side of each continuous run stairs with 4 or more risers.
2. Top of handrails shall be placed no less than 34 inches or more than 38 inches above the stair nosing.
3. Handrails must be continuous the entire length of the stairs, from a point directly above the top riser to a point directly above the lowest riser, and return to a wall or post.
4. Handrails shall be placed at least 1½ inches from any wall or other obstruction and cannot project more than 4½ inches over the stairs.
5. The handgrip area shall not be less than 1¼ inches or more than 2¾ inches in width.

    a. Type I: Handrails with a circular cross section shall have an outside diameter of at least 1¼ inches and not greater than 6¼ inches with a maximum cross section dimension of 2¼ inches.

    b. Type II: Handrails with a perimeter greater than 6¼ inches shall provide a graspable finger recess area on both sides of the rail. The finger recess shall begin within a distance of ¾ inch measured vertically from the tallest portion of the profile and achieve a depth of at least $^{5}/_{16}$ inch within ⅞ inch below the widest portion of the profile. The minimum width of the handrail above the recess shall be 1¼ inches to a maximum of 2¾ inches. Edges shall have a minimum radius of 0.01 inch.

Guards:

1. Decks, porches, balconies, ramps or raised floor surfaces located 30 inches or more above the floor or grade below shall have guards not less than 36 inches in height.
2. Porches and decks which are enclosed with insect screening shall be equipped with guards where the walking surface is located more than 30 inches above the floor or grade below.
3. Open sides of stairs with a total rise of more than 30 inches above the floor or grade below shall have guards not less than 34 inches in height measured vertically from the nosing of the treads.
4. The requirement for guards along the open sides of stairs not only applies to the portion of a stairway that is more than 30 inches above the adjacent floor, but it also applies to any portion of a flight of stairs less than 30 inches above the floor.
5. All guards shall have intermediate rails or ornamental closures that prohibit the passage of a sphere 4 inches or more in diameter. The triangular openings formed by the riser, tread and bottom rail of a guard at the open side of a stairway are permitted to be such a size that a 6 inch sphere cannot pass through.
6. When designed properly, the top rail of a guard can also serve as the required handrail.

HANDRAIL AND GUARD for STAIRS DETAIL, TYPICAL

Handrails must be continuous the full length of stairs And cannot be interrupted by any post.

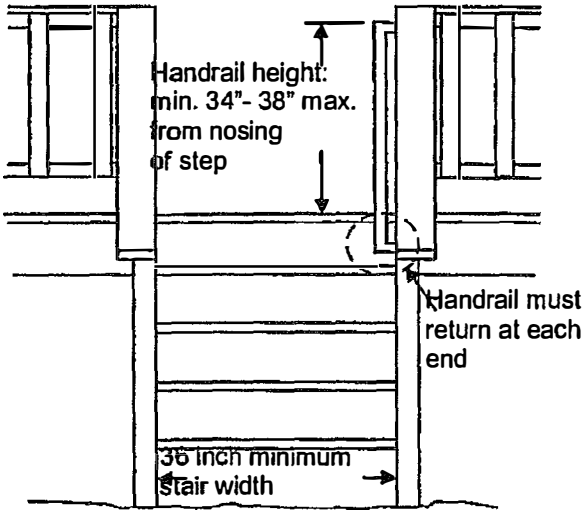

Guards are required for stairs with a total rise of 30 inches or more.

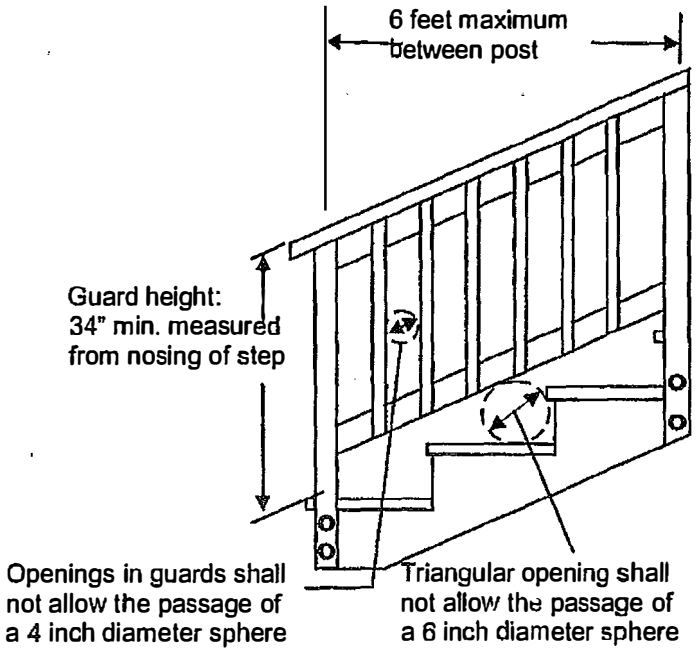

Acceptable Handrail Profiles, typical

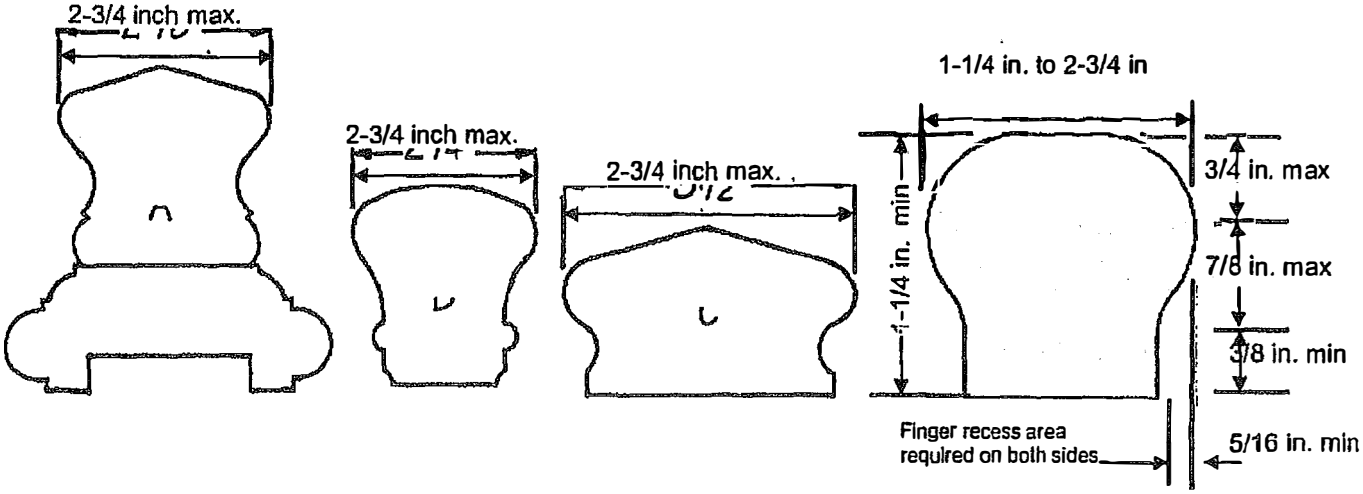

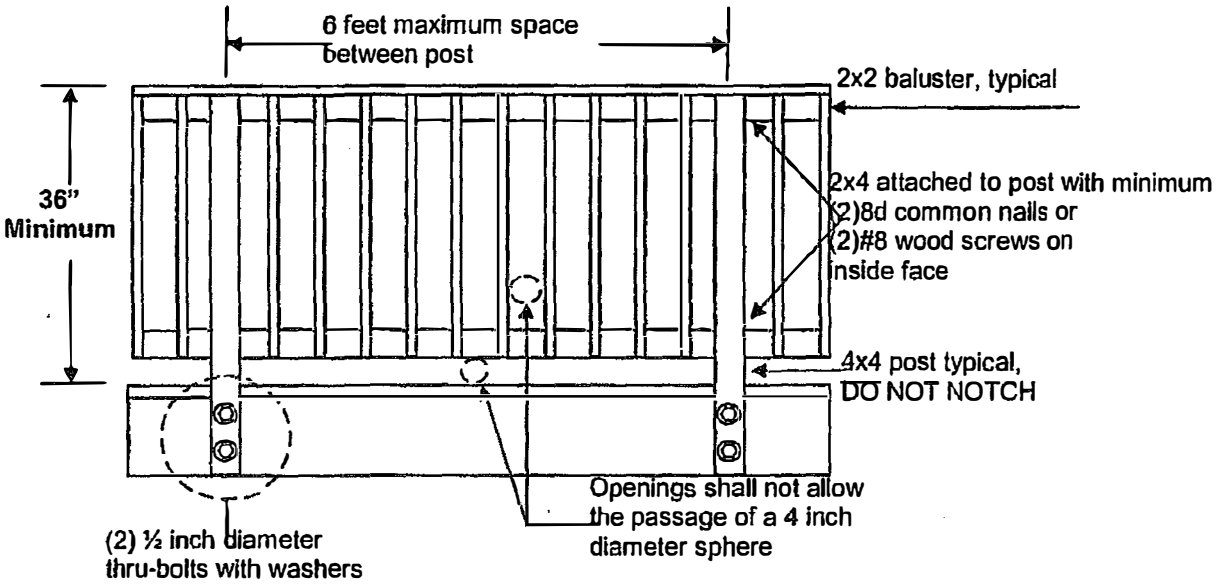

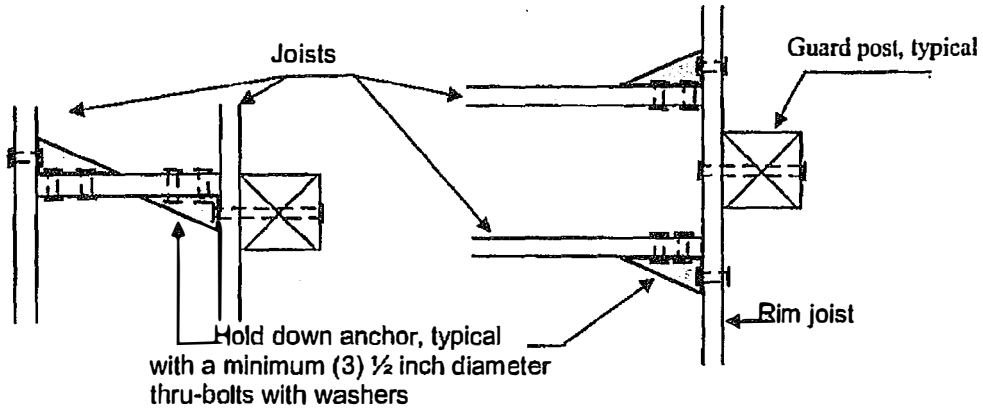

Post can be located on the inside of the joist.

STAIR DETAILS, TYPICAL

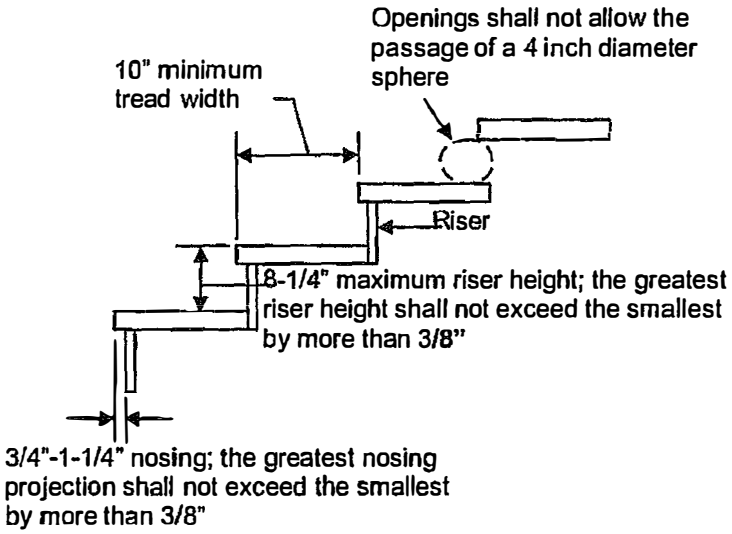

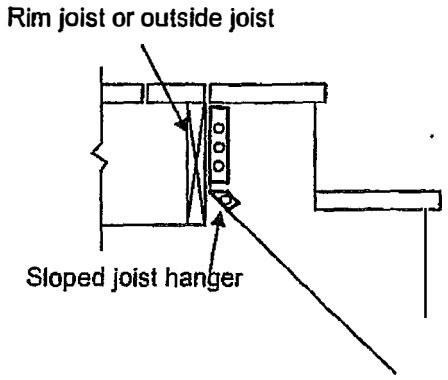

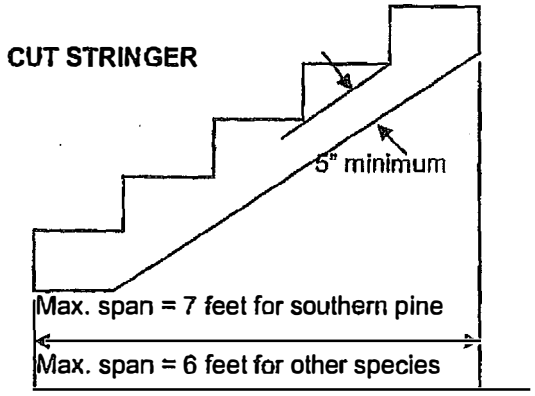

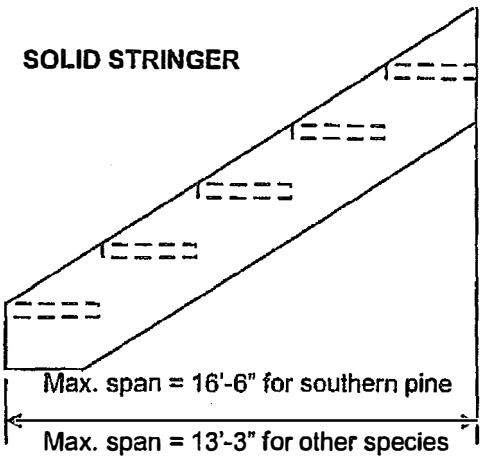

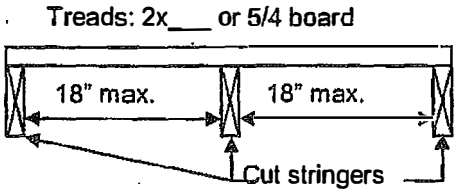

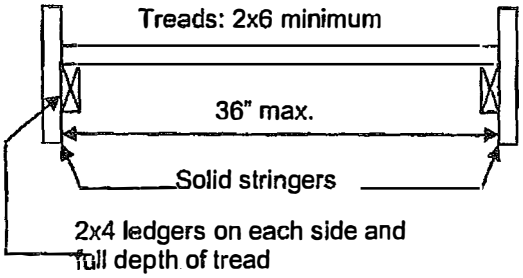

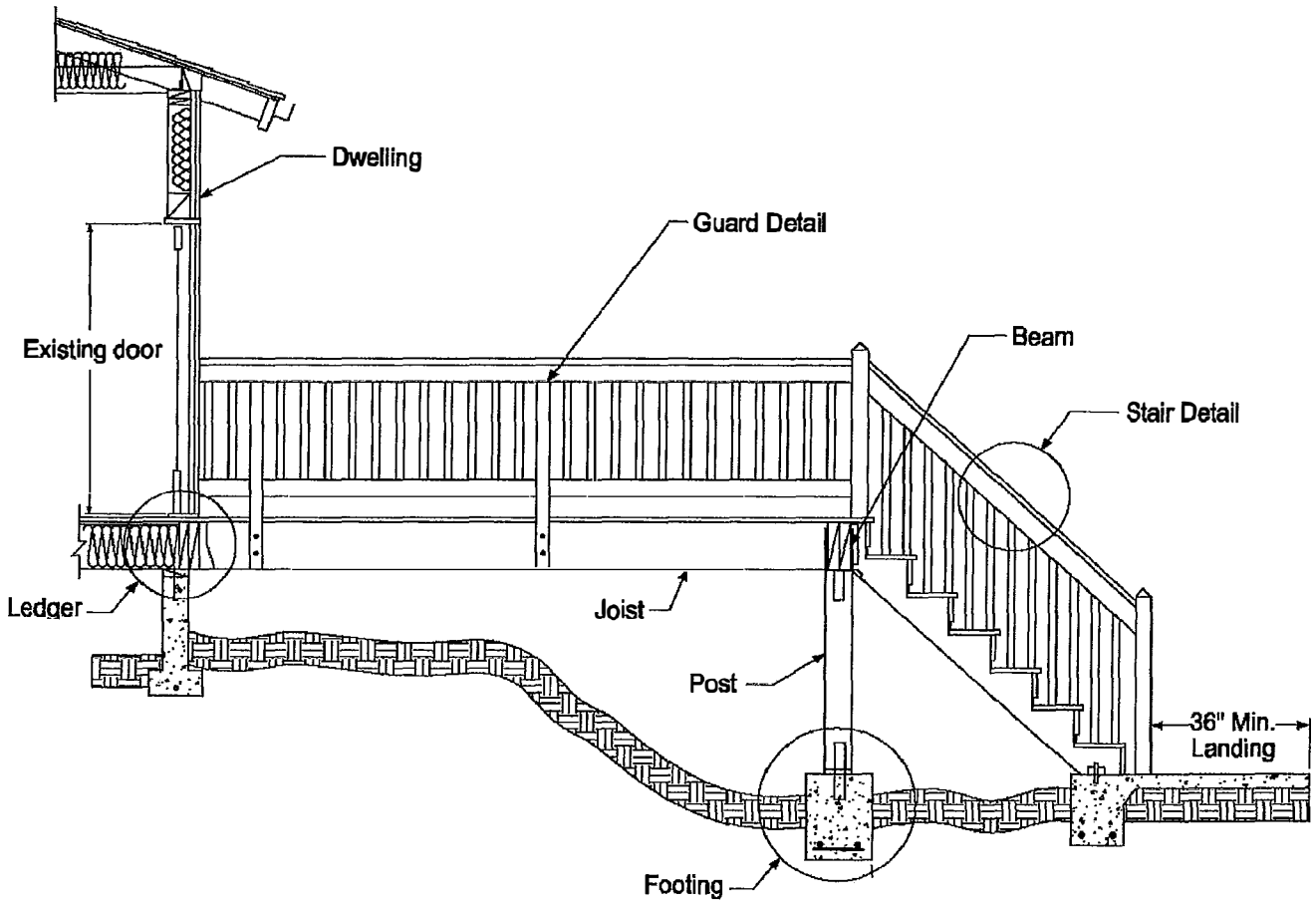

TABLE R507.4
DECK POST HEIGHT[a]

DECK POST SIZE	MAXIMUM HEIGHT[a,b] (feet-inches)
4 × 4	6-9[c]
4 × 6	8
6 × 6	14
8 × 8	14

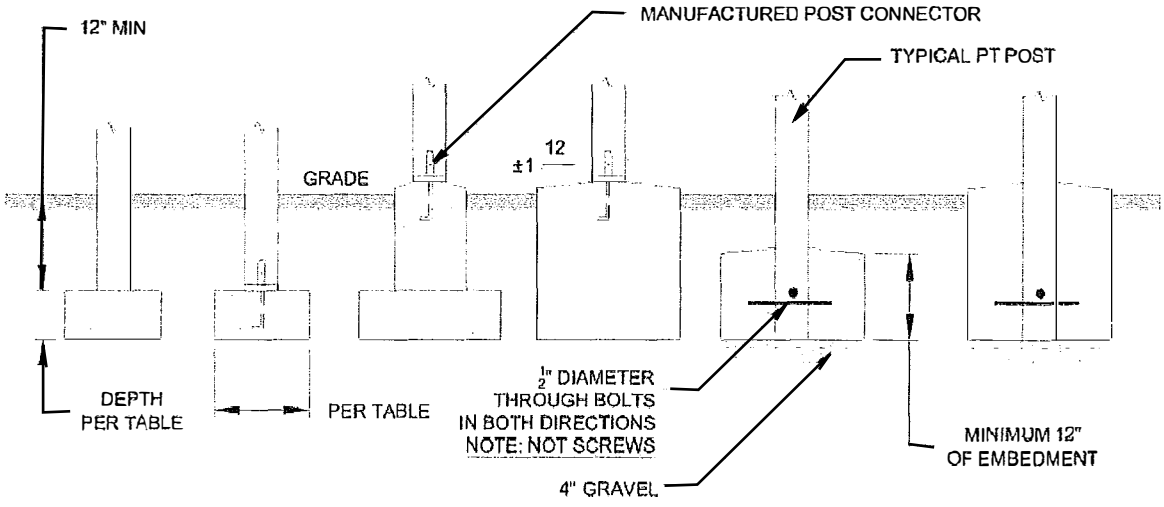

NOTE:
POSTS MUST BE CENTERED ON OR IN FOOTING

Example Deck Top View

- Add beams as needed to fit your design.
- Fill in dimensions to fit your design.
- Indicate the distance from the ground to the top of the deck.
- **Decks can be free standing and not attached to the house, this would require additional beams.**

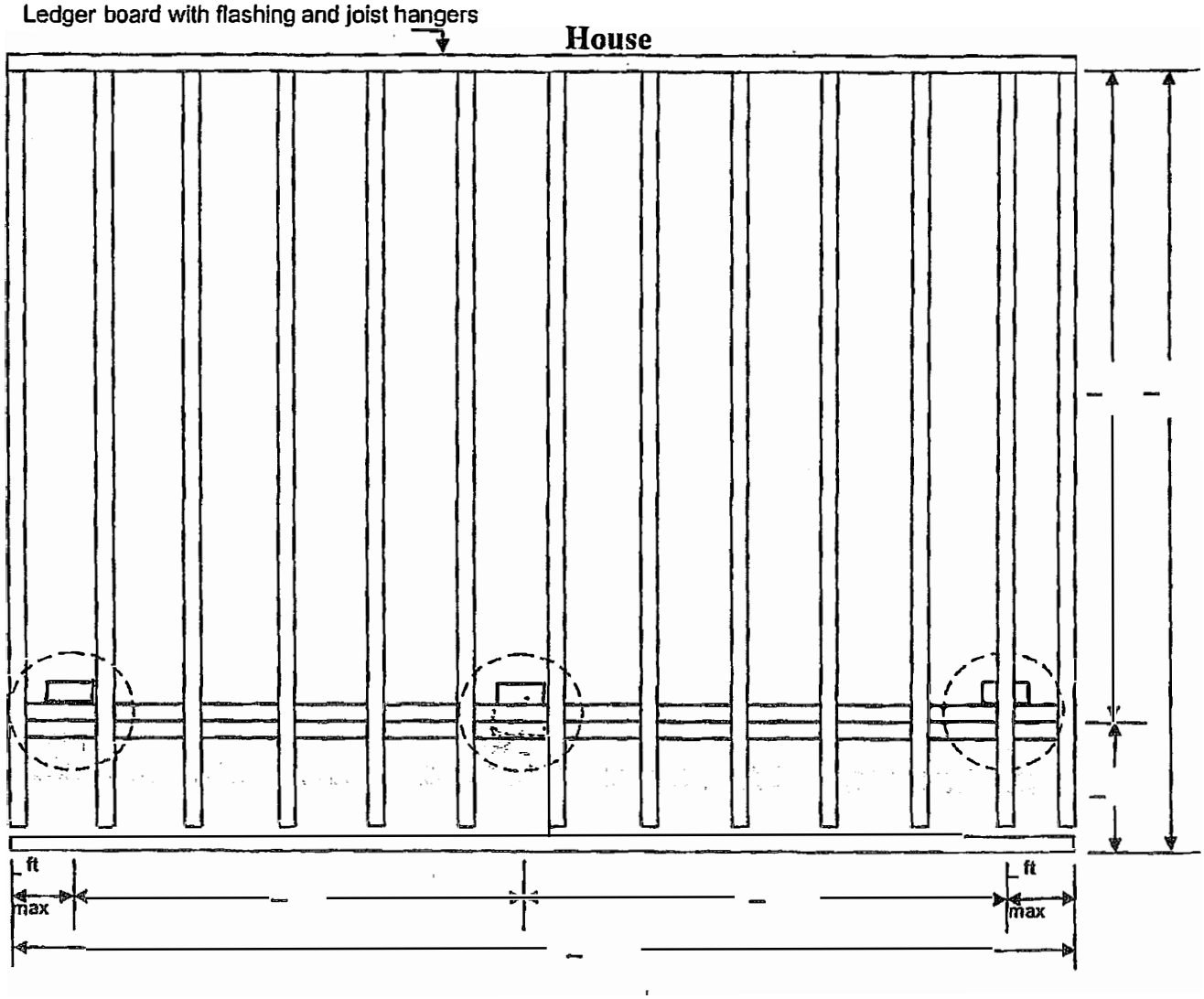

The following are examples of joist hanger fasteners that are acceptable by code.

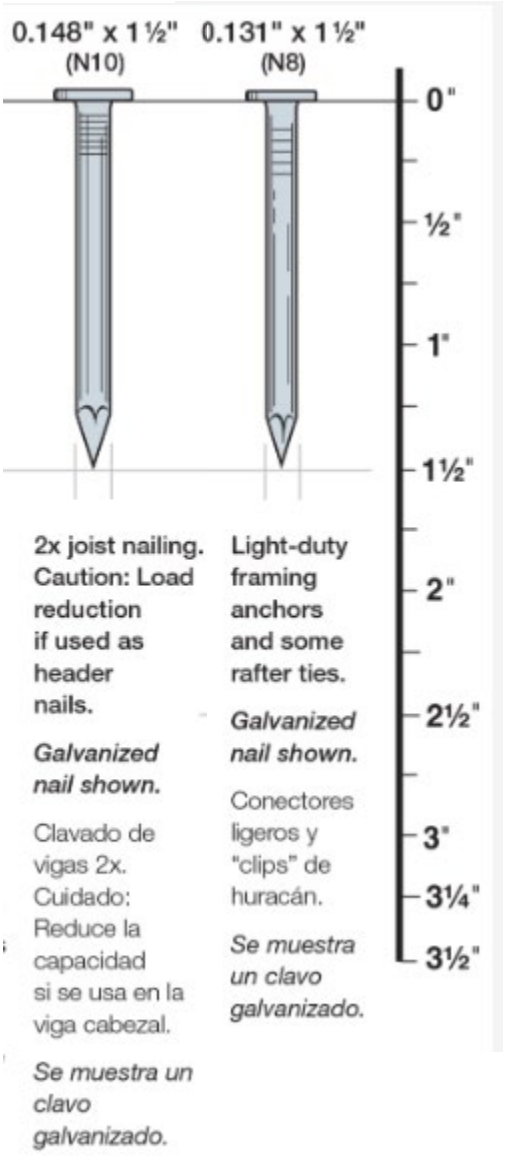

Simpson Strong-Tie

#9 x 1-1/2 in. Hex Drive, Strong-Drive SD Connector Screw

Simpson Strong-Tie

#10 x 1-1/2 in. Hex Drive, Strong-Drive SD Connector Screw

Exterior Deck Screws are not allowed to be used in joist hangers as they do not have the proper shear strength

Example Pool Deck Top View

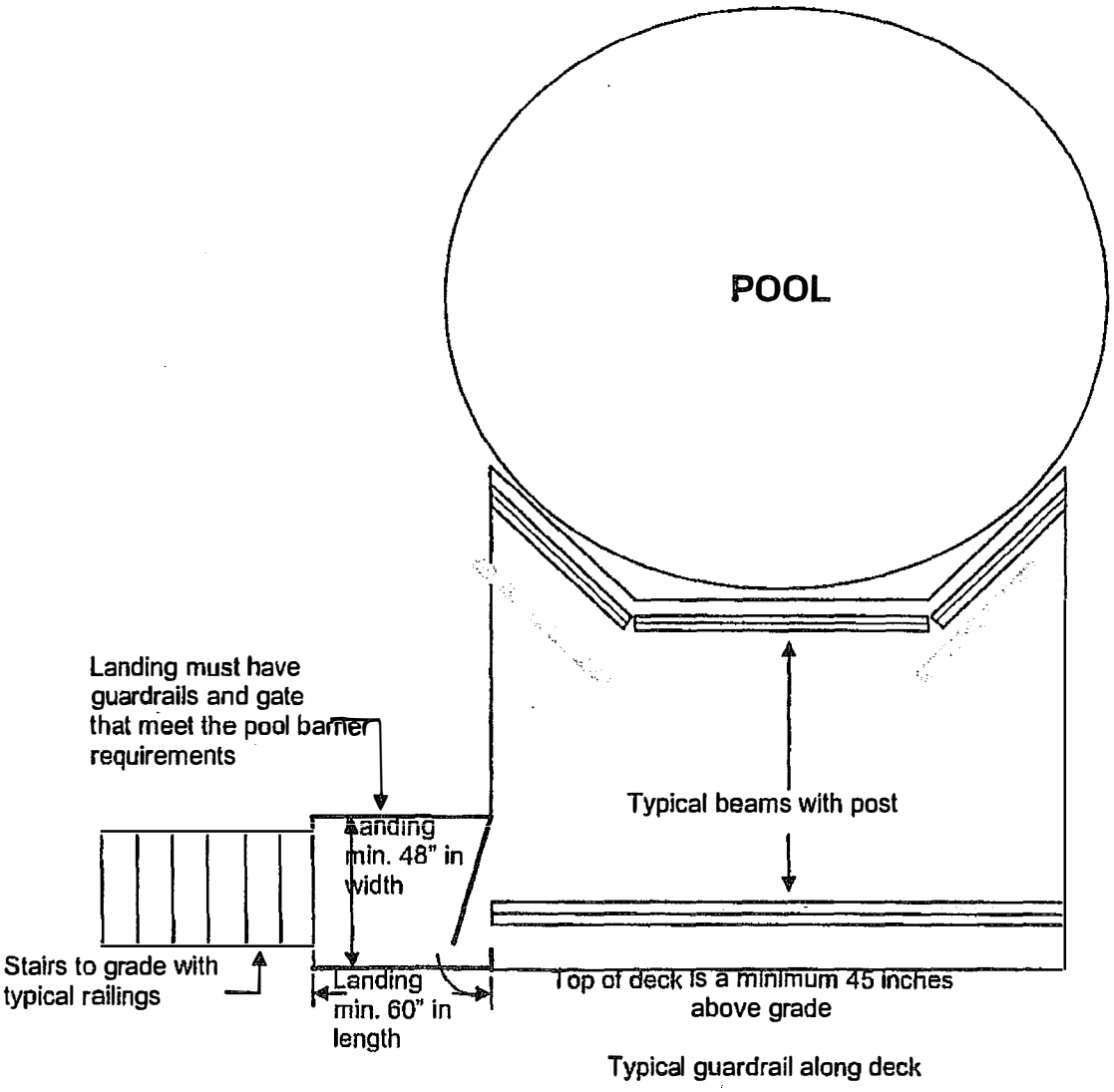

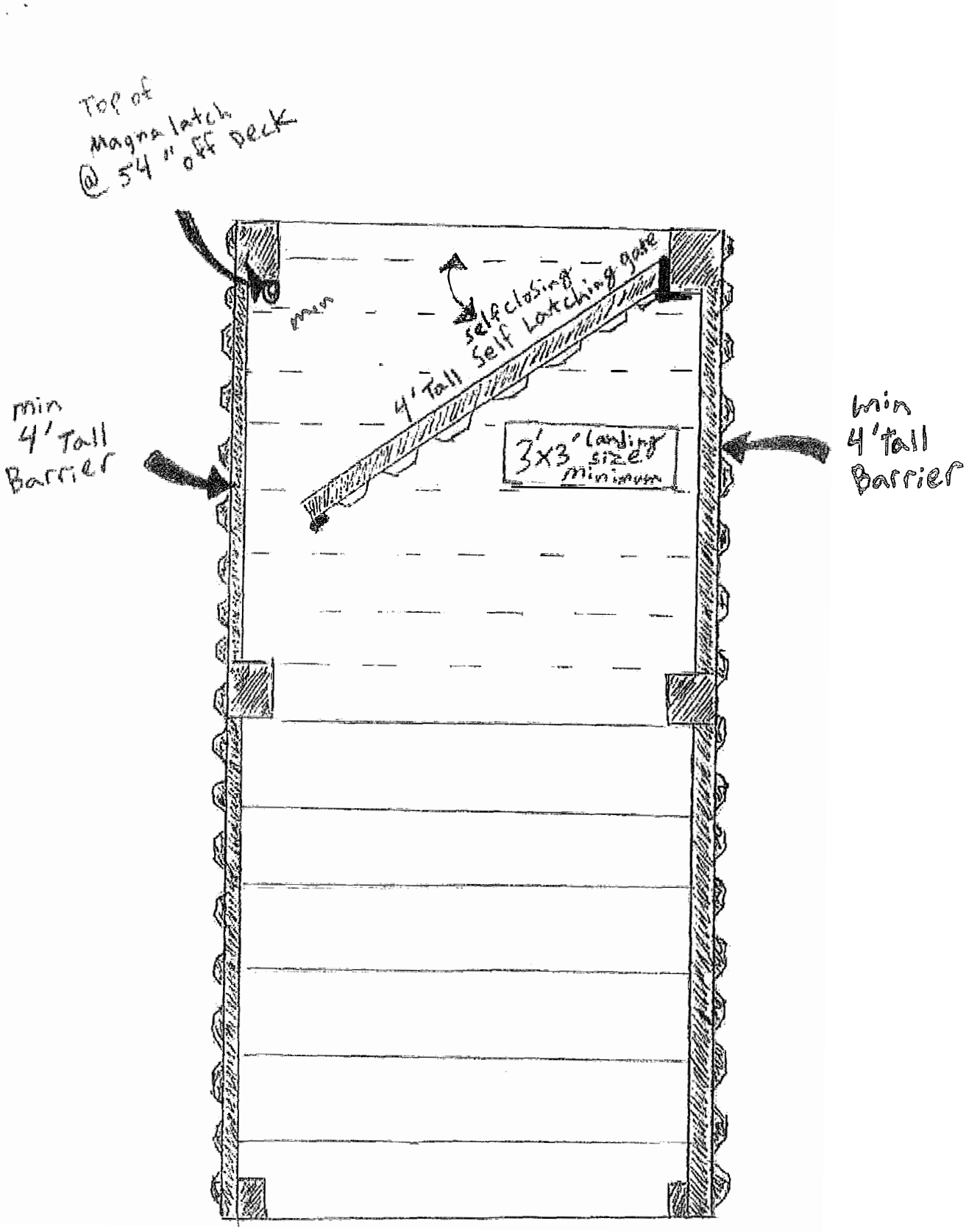
Top of
Magna latch
@ 54" off Deck
min
4' Tall
Barrier
self closing
Self Latching gate
4' Tall
3'x3' landing
size
minimum
min
4' tall
Barrier

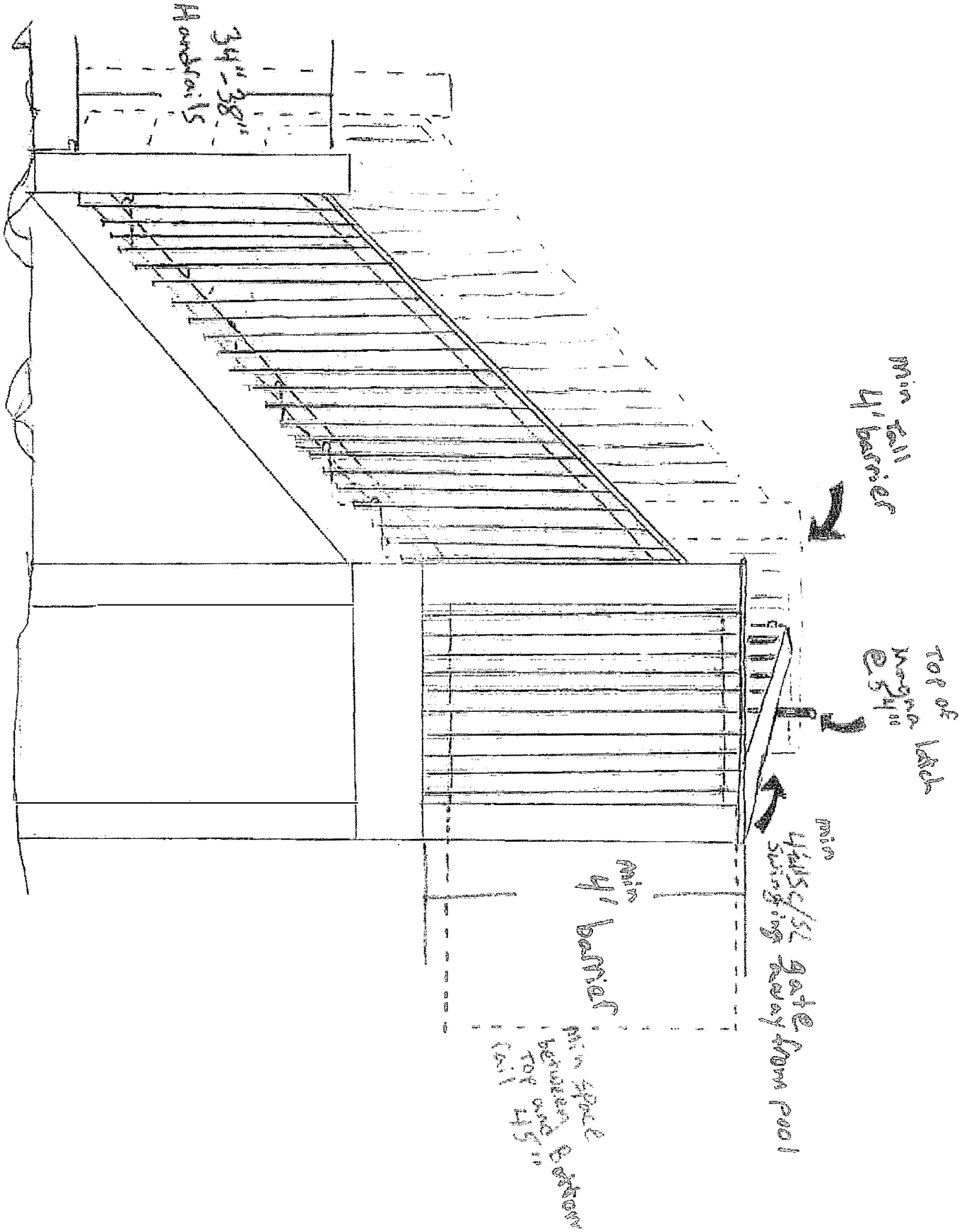
34"-38" Handrails
min tall 4' barrier
Top of magna latch @ 54"
min 4' barrier
min space between Top and Bottom rail 45"

MAGNALatch® Series 3

AUSTRALIAN MADE AND OWNED

The industry leading magnetic child safety gate latch

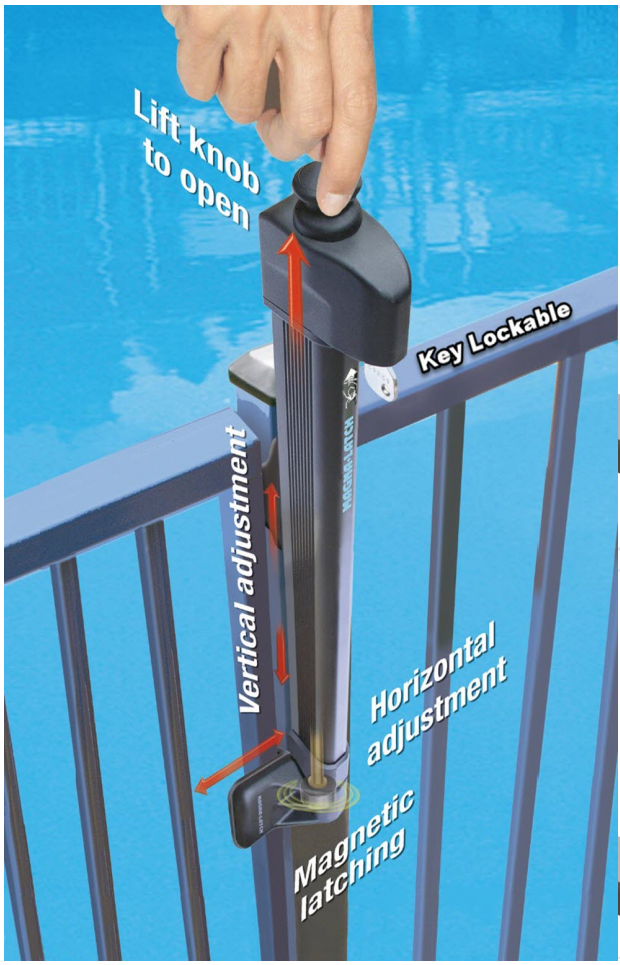

World's renowned safety features

- Ideal for residential or commercial safety gates
- Improved, stylish "Series 3" design
- Industry leading magnetic latching technology
- Visual indicator provides Locked/Unlocked status
- 6-pin lock for higher security (rekeyable)
- Vertical and horizontal adjustment
- Alignment marks indicate when adjustment is required

ROUND METAL WOOD VINYL HIGH QUALITY - NO RUST

D&D Technologies

World's most trusted gate hardware